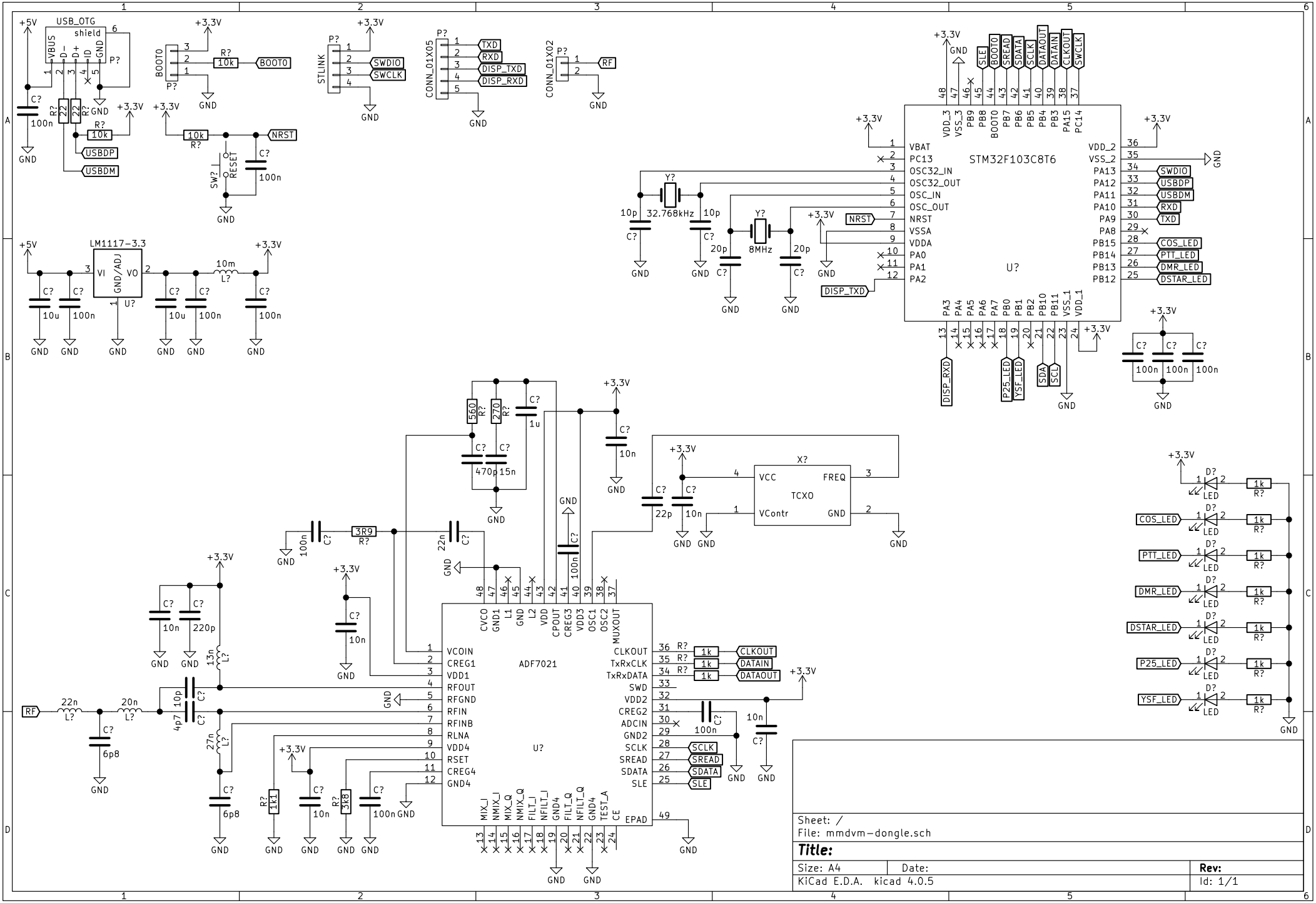
USB_OTG
shield
VBUS
D-
D+
ID
GND
BOOT0
STLINK
SWDIO
SWCLK
CONN_01X05
TXD
RXD
DISP_TXD
DISP_RXD
CONN_01X02
RF
NRST
RESET
USBDP
USBDM
LM1117-3.3
VI
VO
GND/ADJ
STM32F103C8T6
U?
VBAT
PC13
OSC32_IN
OSC32_OUT
OSC_IN
OSC_OUT
NRST
VSSA
VDDA
PA0
PA1
PA2
VDD_2
VSS_2
PA13
PA12
PA11
PA10
PA9
PA8
PB15
PB14
PB13
PB12
PA3
PA4
PA5
PA6
PA7
PB0
PB1
PB2
PB10
PB11
VSS_1
VDD_1
SLE
BOOT0
SREAD
SDATA
SCLK
DATAOUT
DATAIN
CLKOUT
SWCLK
COS_LED
PTT_LED
DMR_LED
DSTAR_LED
P25_LED
YSF_LED
SDA
SCL
32.768kHz
8MHz
TCXO
VCC
FREQ
VContr
GND
ADF7021
VCOIN
CREG1
VDD1
RFOUT
RFGND
RFIN
RFINB
RLNA
VDD4
RSET
CREG4
GND4
CLKOUT
TxRxCLK
TxRxDATA
SWD
VDD2
CREG2
ADCIN
GND2
SCLK
SREAD
SDATA
SLE
EPAD
CVCO
GND1
L1
GND
L2
VDD
CPOUT
CREG3
VDD3
OSC1
OSC2
MUXOUT
MIX_I
NMIX_I
MIX_Q
NMIX_Q
FILT_I
NFILT_I
GND4
FILT_Q
NFILT_Q
GND4
TEST_A
CE
+5V
+3.3V
GND
Sheet: /
File: mmdvm-dongle.sch
Title:
Size: A4
Date:
Rev:
KiCad E.D.A. kicad 4.0.5
Id: 1/1