UNIMAT 3 THREADING ATTACHMENT

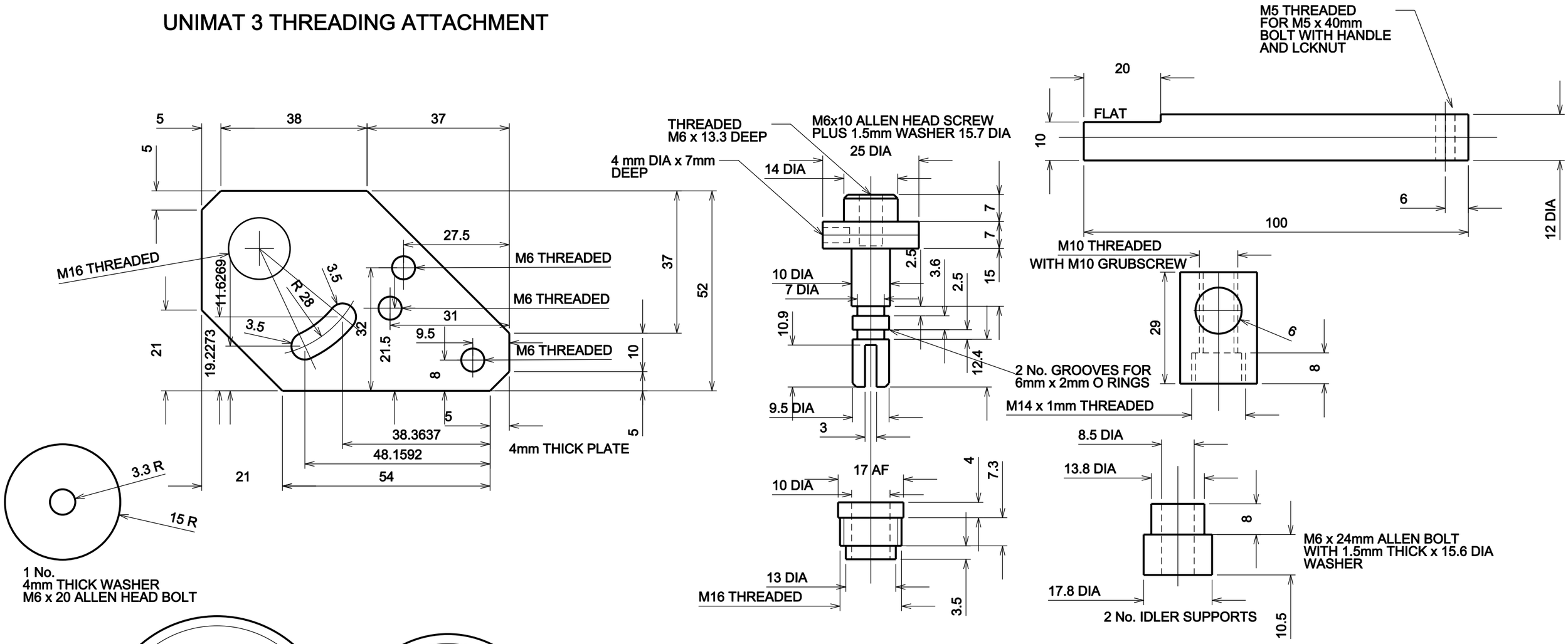

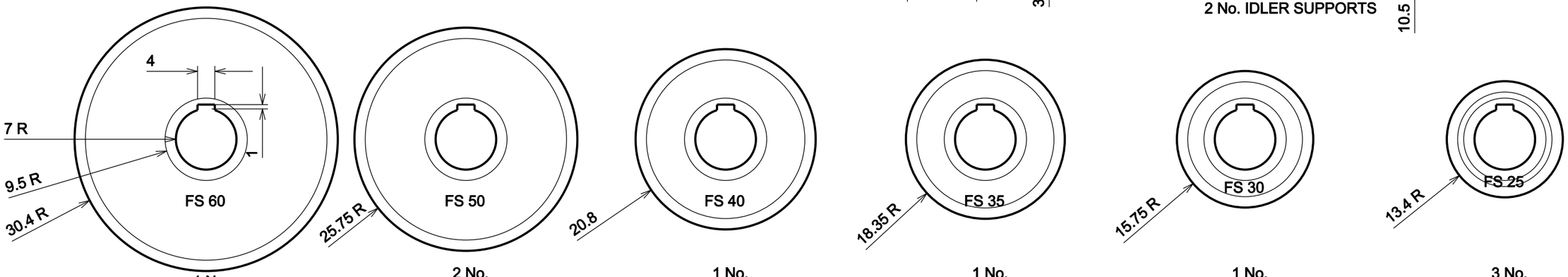

1 No.	2 No.	1 No.	1 No.	1 No.	3 No.
60 TEETH	50 TEETH	40 TEETH	35 TEETH	30 TEETH	25 TEETH
8mm THICK	8mm THICK	8mm THICK	8mm THICK	8mm THICK	8mm THICK
RELIEVED TO 7.6MM @19mm DIA	RELIEVED TO 7.6MM @19mm DIA	RELIEVED TO 7.6MM @19mm DIA	RELIEVED TO 7.6MM @19mm DIA	RELIEVED TO 7.6MM @19mm DIA	RELIEVED TO 7.6MM @19mm DIA