REVISIONS			
REV.	DESCRIPTION	DATE	APPROVED
...	...	...	...

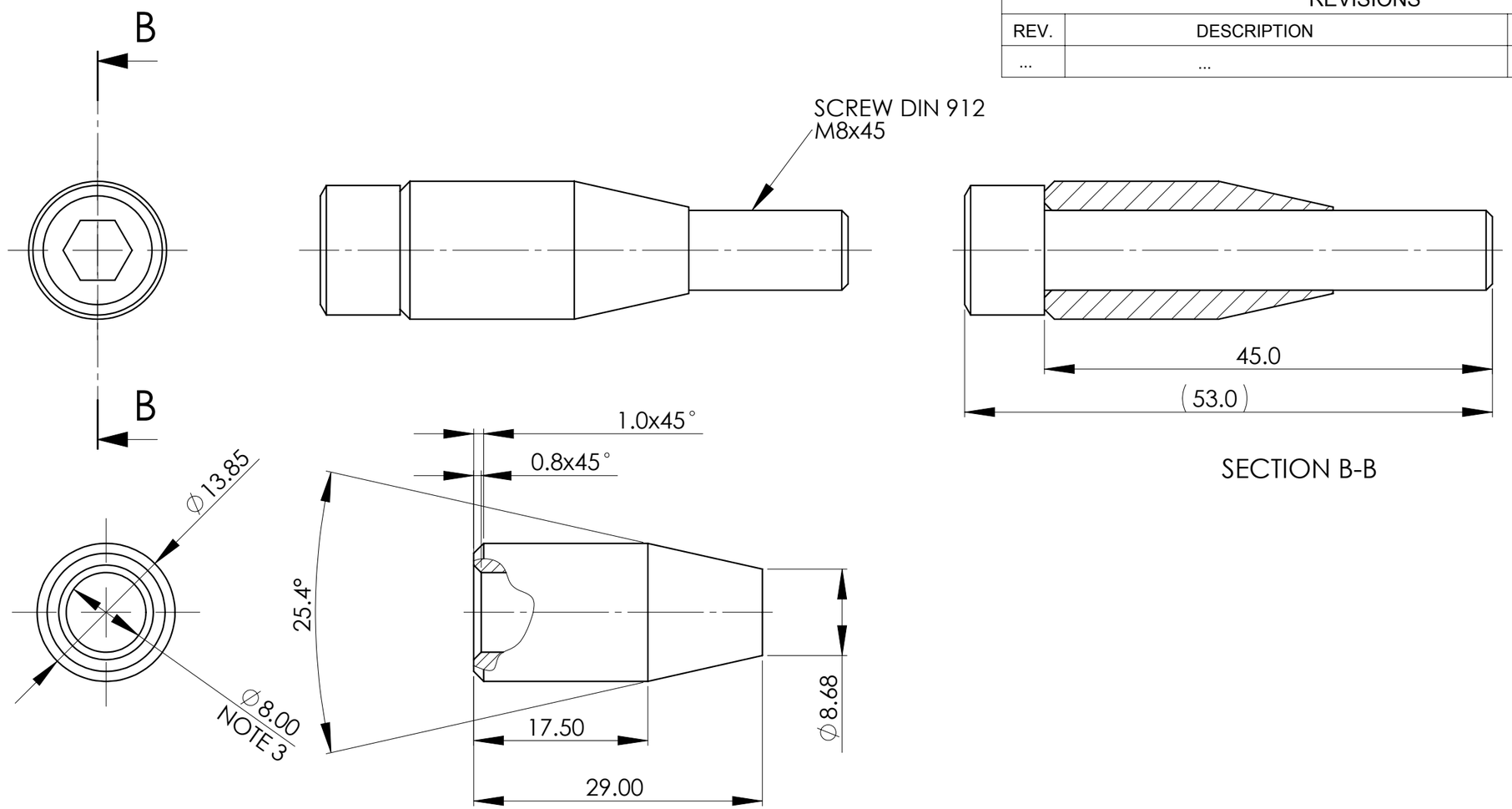

NOTES:
1. REMOVE ALL BURS AND SHARP EDGES
2. M8 SCREW CAN BE SECURED IN PLACE WITH LOCTITE RETAINING COMPOUND
3. DRILL ∅8.00mm HOLE AS CLOSE TIGHT FIT ON TO THE M8 SCREW

NOTICE:
The information contained hereon is the sole property of CNCWINGS. This drawing and/or technical data is issued in confidence for information only and may not be reproduced or used to manufacture anything shown or referred to hereon without direct written permission from CNCWINGS to the user. This drawing and/or technical data is loaned for mutual assistance and is to be returned or destroyed after use.
THIS DRAWING AND/OR TECHNICAL DATA IS THE PROPERTY OF CNCWINGS

ITEM NO.	PART OR IDENTIFYING NO.	DESCRIPTION	MANUFACTURER	QTY REQ'D

PARTS LIST

MASS: 0.095 KG

UNLESS OTHERWISE SPECIFIED DIMENSIONS ARE IN: MILLIMETERS
TOLERANCES ARE:
X. ± 0.8
.X ± .5 .X° ± 1°
.XX ± .1
.XXX ± .05

MATERIAL: ANSI 1020 STEEL, ROUND BAR

FINISH: NONE

SIMILAR TO: N/A

JOB NO: UNI

DRAWN: R.GARGULAK DATE:

DESIGNED: DATE: 03/04/2017

CHECKED: DATE:

APPROVED: DATE:

APPLICATION: N/A

WWW.CNCWINGS.COM

TITLE: HEADSTOCK CLAMPING SCREW, ALT.
CAST IRON BED
UNIMAT DB/SL

SIZE: B | FSCM No. | DRAWING NUMBER: UNI-014 | REV -

SCALE 2:1 | RELEASE DATE: N/A | SHEET: 1 0F 1

March-04-17

Y:\Machinery\UNIMAT\SB200\Drawings\UNI-014